SPEC. INFO	H614-M SPEC.	3191608-S001-0000-B12 NOV.02, 2007

1. Model　　H 6 1 4 － M

2. Application　　For Machine Vision 1/2 Format CCD Camera

3. Specification

3-1. Physical (As per the attached drawing)

(1) Dimensions	φ32 mm × 37.5 mm
(2) Weight	65g
(3) Mount	C-Mount (1-32UN)

3-2. Optical

(1) Focal Length	6 mm ±5%	
(2) Max. Aperture Ratio	1: 1.4	
(3) Iris Range	F / 1.4 to F / 16	
(4) Angle of View	Diagonal	69.0 °
	Horizontal	57.4 °
	Vertical	44.3 °
(5) Picture format	6.4 mm × 4.8 mm	
(6) Minimum Object Distance	0.2m	
(7) Back Focal Length	12.32 mm	
(8) Flange Back Length	17.526 mm	

3-3. Mechanical

(1) Focusing Mechanism　　Rotation Angle　144 °
Focus Ring can be fixed at any positions by thumbscrew
(Refer to external view)

(2) Iris Mechanism　　Click Type
Rotation Angle　107 °
Iris Ring can be fixed at any positions by thumbscrew
(Refer to external view)

3-4. Environmental Temperature Range　　－10℃ to ＋50℃

4. Accessories

(1) Front Lens Cap	1 piece
(2) Rear Lens Cap	1 piece
(3) Packing Box	1 piece

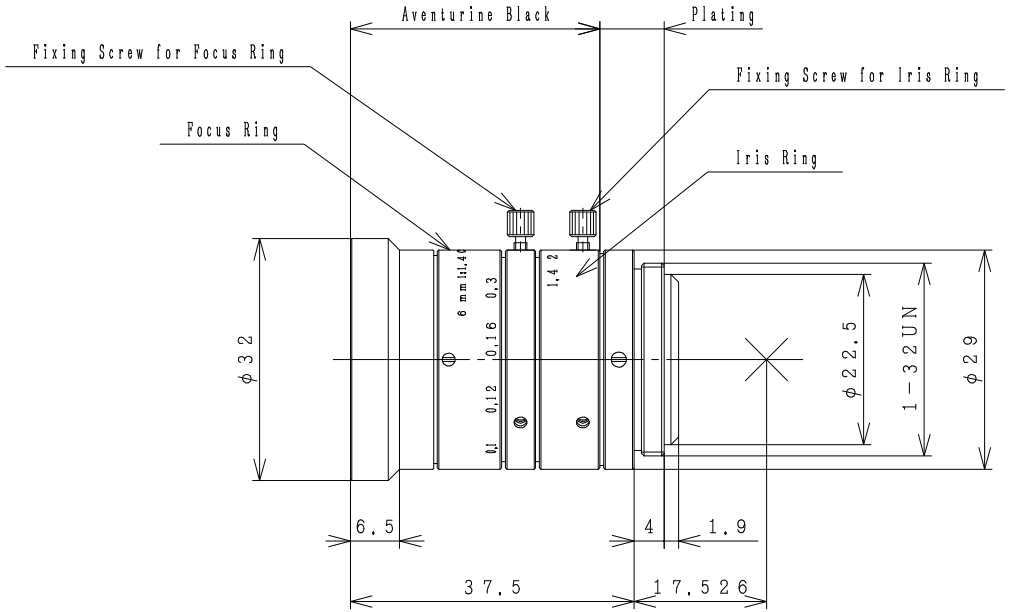

SPEC. INFO	3191608-S001-0000-B22
	NOV. 02, 2007
PENTAX Corporation Security System Division	